Email: manager@fsyuejia.com
Tel: 0757-82721287 +86 18933973968

SPECIFICATION FOR APPROVAL

Customer Name:

Customer P/N:

Product Name: Electronic ballast for UV-Lamps

Model NO: 1A-(105-320)

Supplire P/N:

Rev: A1.0

Date: 2023-08-15

Approved by Yue Jia		
Checked	Rechecked	Approved

Please send the original back to us after you have approved and signed.

Approved by customer		
Comments	Approved	Company's seal
Customeris Name:		

Electronic Ballast

www.fsyuejia.com

1A-(105-320)

APPLICATION and PERFORMANCE SPECIFICATION

- Shell material Aluminum
- Europe type terminal structure
- Green and red led indicate operating status
- Potentlal free relay contact on/off out
- Must cut off the power before installation and replacement ballast
- Diameter of wire 1.0~1.5mm^2,Wire stripping 8~10mm
- No moer than 5 meters distance between the ballast and lamp
- Ballasts case must be grounded

CE EAC LVD RoHS

Technical - Electrical Data	Conditions	Min	Nom	Max	Unit
Voltage Range		220	230	240	Vac
Input Frequency			50/60		Hz
Input Current				3.7@230V	A
Input Power				350	W
Power Factor	Full Load		>0.98		PF
Lamp Output Power		105		320	W
Lamp Output Current		1.2	1.82 2.1	3.2	A
Preheat start,Suitable for more times startup			>20000		Times
Lamp preheating current can be adjusted		1.45	2.4 2.8	4.3	A
Lamp preheating time can be adjusted		5	12 24	24	S
Dimming mode	PWM 0-10V		(Dimming control range:50%-100%)		

Technical - Temperatures				
Maximum operating temperature at the Tc			+70	℃
Ambient temperature range Ta		-25	+50	℃
Relative Humidity		5	85	%

Safety and Protection	
Protection	Overload Protection Lamp Air Leakage Protection Over Heat Protection Protection Against Moisture
Isolation Class	Class I
Isolation Voltage	1.5KV AC / 5mA / 5s
Protection Class	IP20
Warranty period	2 years

DIP-Switch Settngs

DIP-Switch Settngs

Prehe at TIme	Prehe at Current	Lamp Current	pattern
1 2 11=24S	3 4 11=4.3A	5 6 11=3.2A	7 1=Remote mode
1 2 10=20S	3 4 10=2.8A	5 6 10=2.1A	
1 2 01=12S	3 4 01=2.4A	5 6 01=1.82A	7 0=local mode
1 2 00=5S	3 4 00=1.45A	5 6 00=1.2A	

Normen und Approval	
Safety Norm	EN61347-1-2-3, EN62493
LVD Norm	Low voltage Directive 2014/35/EU
EMC Norm	EN55015, EN55014, GB17743, GB17625, EN61000-3-2
Certifications	CE RoHS

Packaging units	
Packaging units Pieces/ Unit	Shipping carton box (10pcs/CTN)
Dimensions in L x W x H	**0cm x **cm x ***cm
Gross weight	**kg
Volume	*****CBM.

Technical - Geometries

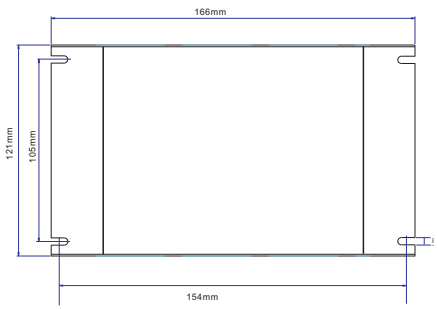

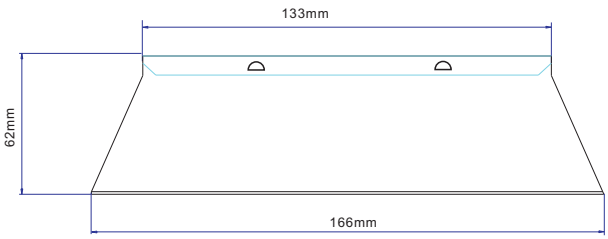
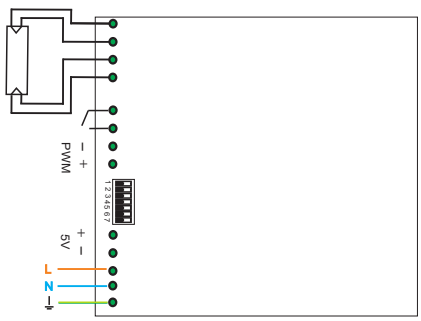
Technical - Wiring diagram